LAB 8: OP AMPS II

UC Berkeley Donald A. Glaser Instrumentation Laboratory

GENERAL GUIDELINES

- **You should complete the prelab questions before beginning benchwork.** Information required to answer the prelab questions can be found in the background material at the beginning of the lab, from lecture, in the stated references, and on the web.

- **Please ask questions of the GSIs or professor(s)** at any time during the course!

- Wikipedia has many useful and informative articles. You are strongly encouraged to use Wikipedia and other online resources to better understand any material.

- **Problems with this icon need to be checked off by GSIs.**

- **Problems with this icon indicate that you should take a picture of the circuit built for the problem and include it in your report. Include your student ID, with name clearly visible, in the photo.**

- **Problems with this icon indicate that you should take a screenshot of the WaveForms oscilloscope.**

- **Important Safety Habits**
  - Before stopping for the day or taking a break, make sure you power down all equipment.
  - When possible, use the switches for the power supplies to power down the circuit when changing the wiring. It is easy to accidentally short wires and damage your equipment or electronic components.
  - Never place food or drink next to any apparatus. Accidental spills can damage or destroy the equipment and your experiment.

1. LEARNING GOALS

(1) Learn and understand some op amp applications:
  (a) Measuring current with op amps
  (b) Creating stiff current sources with op amps
  (c) Filtering
(2) Understand applications of positive feedback with op amps:
  (a) comparators
  (b) oscillators
(3) Lego blocking

2. LAB BACKGROUND READING

"Microelectronic Circuits", Sedra and Smith	Chapter 2 skim Chapter 10
"The Art of Electronics", Horowitz & Hill, 3rd edition	Chapter 4

Table 1. Additional Background References

2.1. **Active Filters.** Filter design is one of the most complicated subjects in analog circuit design; the UCB libraries, for example, have about twenty entire books solely on this subject! The ideal filter is called a *brickwall filter*: it has exactly unity gain in its pass region, exactly zero gain everywhere else, and does not induce any phase shifts. Unfortunately, perfect analog brickwall filters are impossible to construct. Brickwall filters can be constructed digitally at the expense of a long time delay between the input and output signals. This delay allows a digital filter to use information from future times to calculate the response at the current time. Analog filters, however, must be causal; as they cannot anticipate the future, their response can only depend on past information, and they can never be perfect.

Though we don't have a perfect analog filter, we can still optimize for particular properties of the filter, leading to many different filter designs, each attempting to optimize different aspects of the filter's performance. For example, the simple RC low and high pass filters you constructed at the beginning of this course, and other filters constructed entirely from passive components, suffer from gradual frequency response, unwanted phase shifts, and high output impedance.

Better filters can be constructed with active components like op amps. The simplest op amp filters just use the simple inverting amplifier or non-inverting amplifier geometries replacing the resistive elements with frequency dependent elements (i.e. some combination of resistors, capacitors and inductors). To find the transfer function of the resulting filter, $H(\omega)$, we use the amplifier gain formulas that have been derived with the op amp golden rules, but swap in the appropriate impedance.

More complex filter geometries are also possible. The Chebyshev active filter constructed in this lab is optimized for a sharp fall in its transition, or skirt region.[1]

2.2. **Positive Feedback Applications. ALL THE OP AMP APPLICATIONS DISCUSSED HERE DO NOT HAVE NEGATIVE FEEDBACK!**

A comparator is a circuit that compares two voltages and outputs a voltage in response. An op-amp used without feedback can function as a comparator as shown in Fig. 1. When $V_- > V_+$ ($V_{\text{ref}} > V_{\text{in}}$), the output will become as negative as it can, typically within a volt or so of the negative power supply. This is called the *low*, or *off* state. When

[1] There are powerful online tools for designing filters that greatly simplify the work. For instance, see this website.

$V_+ > V_-$ ($V_{\text{in}} > V_{\text{ref}}$), the output will become as positive as it can, typically within a volt or so of its positive power supply. This is called the *high*, or *on* state.

Comparators are used, for instance in thermostatically-controlled heating systems to compare the output voltage from a temperature sensor to a reference voltage corresponding to the desired temperature. When the sensor voltage falls below the reference voltage, the comparator changes state, and turns on the furnace. As the furnace heats the house up, the sensor voltage rises, and the comparator eventually changes back to its original state, thereby turning the furnace off.

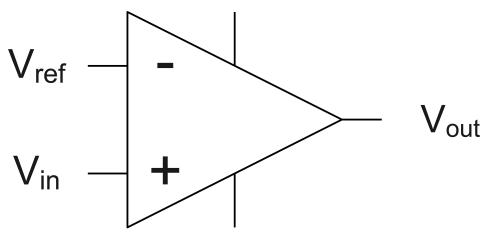

FIGURE 1. Simple comparator.

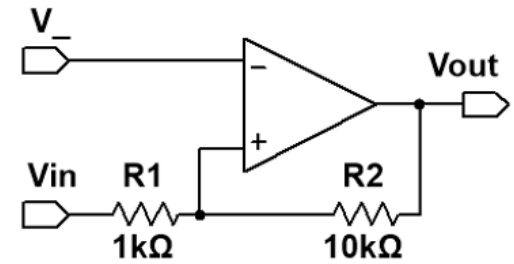

FIGURE 2. Hysteretic comparator.

A simple comparator, however, is not always a good choice. For example, a house will not stay exactly at the desired temperature, but fluctuate ever so slightly around it. This fluctuation would then cause the furnace to turn on and off frequently. Cycling the power on the furnace rapidly can lead to wear on the fan motors, and inefficiency in the furnace operation. To avoid such cycles, thermostats are designed to turn off at a higher temperature than the temperature at which they turn on. For example, the thermostat might be designed to turn on when the temperature falls below 19 °C and turn off once the temperature climbs above 20 °C. This difference between the turn-on and turn-off temperatures is an example of a *hysteresis*. A hysteretic system is a system whose state depends on its history. Whether the furnace is on or off (its state) depends on both the temperature of the room and the history of the heating cycle: cooling down to the turn-on temperature or heating up to the turn-off temperature.

Another example of a hysteretic comparator is found in nighttime-sensing streetlamps. You might design such a lamp with a comparator that compares a signal from a light-sensitive photodetector with a reference signal. At nightfall the photosignal falls below the reference signal, and the comparator turns the streetlamp on. At daybreak the photosignal rises, and the comparator turns the lamp off. Unfortunately, if you used a simple comparator, turning the lamp on at nightfall would cause some light to enter the photodetector. The lamp would then turn back off and repeat this cycle, creating an inadvertent strobe light (which would be very annoying to sleep with!). Using a hysteretic comparator prevents this sort of stuttering.

Consider the hysteretic comparator shown in Fig. 2. The output switches between $\pm V_{\text{rail}}$ when $V_+ = V_-$. Note that this equality is true only at the instant that the comparator changes state. V_+ is a floating voltage divider and thus V_+ is just the weighted average of V_{in} and $V_{\text{out}} = \pm V_{\text{rail}}$[2]:

$$V_+ = \frac{R_2}{R_1 + R_2} V_{\text{in}} + \frac{R_1}{R_1 + R_2} V_{\text{out}} \tag{1}$$

From this we can calculate the switching threshold V_{switch}, the value of V_{in} that causes the output to switch. At this value of V_{in}, $V_+ = V_-$:

$$\begin{aligned} V_- = V_+ &= \frac{R_2}{R_1 + R_2} V_{\text{switch}} + \frac{R_1}{R_1 + R_2} V_{\text{out}} \\ V_{\text{switch}} &= \left(1 + \frac{R_1}{R_2}\right) V_- - \frac{R_1}{R_2} V_{\text{out}} \\ &= V_{\text{thresh}} - \frac{R_1}{R_2} V_{\text{out}} \end{aligned} \tag{2}$$

[2] You did exactly this problem in P1.2!

where we have defined a voltage $V_{\text{thresh}} = \left(1 + \frac{R_1}{R_2}\right) V_-$ (which is dependent only only on V_{in}). Notice that the switching threshold depends upon the output voltage of the op amp because of positive feedback. If $V_{\text{out}} = V_{\text{rail}} \approx +10.5\,\text{V}$ (the on state), the comparator will switch off at $V_{\text{switch}} = V_{\text{thresh}} - \frac{R_1}{R_2}(10.5\,\text{V})$. By contrast, if $V_{\text{out}} = -V_{\text{rail}} \approx -10.5\,\text{V}$ (the off state), then it will switch on around $V_{\text{switch}} = V_{\text{thresh}} + \frac{R_1}{R_2}(10.5\,\text{V})$. The introduction of hysteresis separates the thresholds for the output switching from high-to-low and low-to-high.

Op amps, used without feedback or with positive feedback, can be used as comparators, and we will use them this way in this lab. However, there are special purpose devices deliberately designed to be comparators, and they generally work better than op amps with faster switching speed and precisely defined output voltages.

2.3. **Oscillators.** Oscillators are circuits designed to put out periodic waveforms like sine or square waves. You've been generating periodic waveforms with the Wavegen in this class, so you'll be unsurprised to learn that it is oscillators that make that happen. Oscillators also form a basic part of any radio or TV tuner, and generate the 3 GHz or so clock signals that characterize and control all computer CPUs.[3] You may have already encountered accidental parasitic oscillations while building your radio. Many types of deliberate oscillator circuits exist, but the simplest is called a *relaxation oscillator*. The term dates from when these circuits were built with neon bulbs: a capacitor would be charged until it reached the neon bulb's *turn-on*, or *breakdown voltage*. The bulb would then *avalanche* or *relax down* to its much lower *turn-off voltage*, discharging the capacitor, after which the process repeats. In this lab you will build a relaxation oscillator with an op amp. In practice, relaxation oscillators are usually built with special-purpose chips like a LM555.

2.4. **Photosensitive Devices.** Semiconductor devices like photocells, photodiodes and phototransistors can react to illumination. *Photocells*, sometimes called *solar cells*, convert light to electrical power and are becoming increasingly cheap and practical. *Photodiodes* do not produce power but are good light detectors. They are very similar to normal diodes and are always operated in the reverse-bias region. Recall that reverse-biased diodes do not conduct because of the absence of free carriers at their pn junctions; when a reverse-biased photodiode is illuminated, photons create electron-hole pairs in the junction region. The holes and electrons are swept in the appropriate direction by the junction's electric field, causing a temporary, leakage-like current to flow through the junction. As the number of electron hole pairs created is proportional to the number of photons hitting the junction, and hence to the intensity of the light illuminating the junction, the total leakage current will be proportional to the light intensity.

Any pn junction can show photo activity. Bizarre effects sometimes occur in our 1N4448 diodes because their glass packages allow light to strike the diode junctions. In this lab however, we will use a device optimized for light detection: the OP802SL bipolar phototransistor.

Bipolar junction transistors (BJTs) come in two classes (NPN and PNP), and are three-lead devices; the leads are called the *collector*, the *base*, and the *emitter*. The schematic for an NPN BJT is shown Fig. 3a. The OP802SL phototransistor comes in a standard TO-18 package[4], shown in Fig. 3b, modified to include a plastic lens which focuses light onto the base junction. *The emitter is the lead nearest the case tab, and the collector is the lead 180° from the emitter. The base is the lead in between.*

For a BJT, the **collector** is analogous to a JFET transistor's **drain**; the **base** is analogous to a JFET's **gate**; and the **emitter** is analogous to a JFET's **source**. Bipolar transistor operation is similar to JFET operation, but there are some very significant differences. The general use and operation of these transistors will be discussed in more detail in the next lab. For now, you'll only need to know how to wire them.

[3] You might wonder why an oscillator is necessary in a tuner. It turns out that it is difficult to build sharp, variable-frequency bandpass filters, but is easy to build variable frequency oscillators. To exploit this difference, tuners use a complicated circuit called a *superheterodyne receiver*. These receivers use a tunable bandpass filter stage to crudely select the desired station, followed by a stage that *mixes*, or multiplies, the signal with a signal from the variable frequency oscillator. As the receiver's tuning knob is adjusted, the oscillator frequency shifts so that its beat frequency with the desired station is always at the same frequency: usually 455 kHz for AM, and 10.7 MHz for FM. The beat signal is then passed to a sharply tuned, single frequency filter, which rejects all but the desired station. The oscillators in tuners are responsible for the ban on operating radio receivers during airplane takeoffs and landings. The FAA is afraid that the oscillator might accidentally broadcast a signal that would interfere with the cockpit instruments. Computers, CD players, Gameboys, etc. are banned because of their clock oscillators. The ban is probably based more on paranoia than reality, and the FAA is slowly allowing more devices to be operated.

[4] "Package" refers to the casing of the transistor itself, and each package has a designation under JEDEC. "TO" stands for "transistor outline package, case style 18". Your JFETs are in another package, called the TO-92.

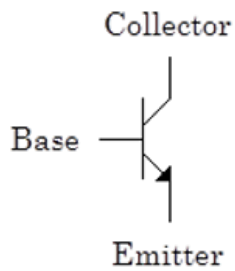

(a) BJT circuit symbol.

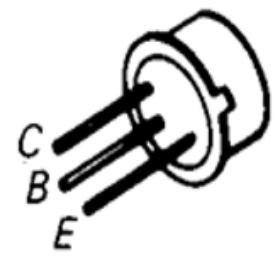

(b) T0-18 package with lead pinout.

FIGURE 3. The bipolar junction transistor.

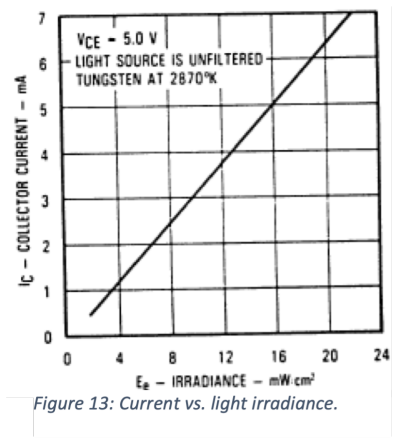

(a) Current flow vs. light flux for fixed $V_{\mathrm{ce}} = 5\,\mathrm{V}$.

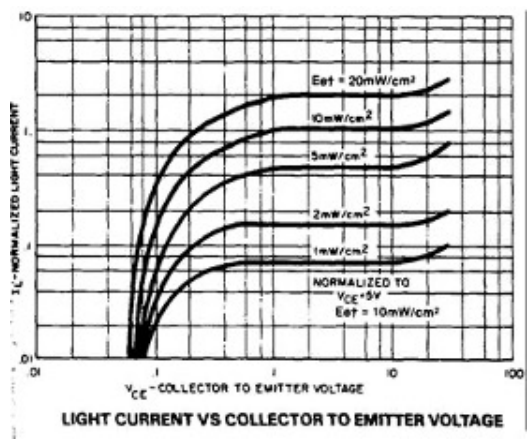

(b) Current flow vs. V_{ce} for various fixed fluxes.

FIGURE 4. OP802SL transistor specifications.

Despite our phototransistor being a three-lead device, we will leave the base unattached and connect only two of its leads. Wiring the base to a voltage source allows the phototransistor to act as a switch which allows significant current to flow from the collector to emitter when a certain light intensity threshold is exceeded. With the base unconnected, the phototransistor acts as a photodiode and produces a current proportional to the light intensity as shown in Fig. 4a. Fig. 4b shows that, for collector-emitter voltages V_{ce} between 1 and 10 V, the current is approximately independent of the collector-emitter voltage; thus the phototransistor looks like a current source.

3. PRE-LAB QUESTIONS

P8.1) Explain how the circuit in Fig. 5 measures current. What is the conversion factor that gives the proportionality between I_{in} and V_{out}?

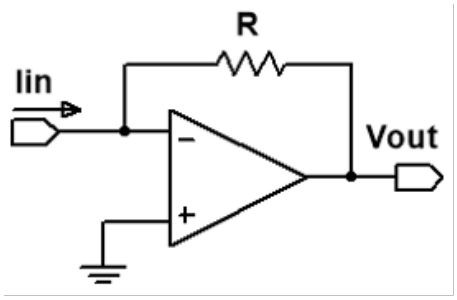

FIGURE 5. Op amp current meter.

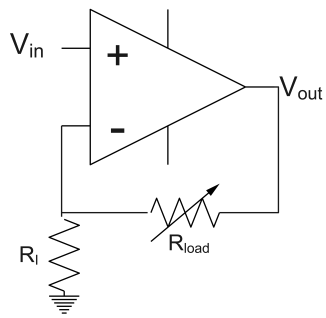

FIGURE 6. Op amp current source.

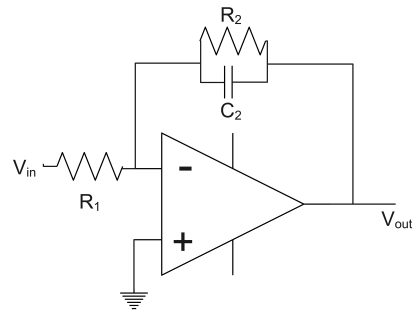

FIGURE 7. Single-pole active filter.

P8.2) Explain how the circuit in Fig. 6 is an ideal current source, i.e. the current through the load resistor R_{load} is independent of the value of its resistance. What is the conversion factor between V_{in} and I_{load}?

P8.3) In the style of our radio circuit, split up the mulitstage filter circuit in Fig. 10 into its constituent lego blocks.

(a) Circle the simple single pole passive filters, and calculate their individual transfer functions $H(\omega)$.

(b) Circle the op amp follower circuit. What is its transfer function? Why is it there?

(c) Calculate the total transfer function of the full circuit.

P8.4) Calculating the transfer function $H(\omega) = \frac{V_{\text{out}}}{V_{\text{in}}}$ for the active single-pole filter that uses the negative amplifier geometry in Fig. 7.

P8.5) Qualitatively explain how the relaxation oscillator circuit[5] in Fig. 16 works. This simplest way to understand what's happening is to recognize that V_{out} is always at $\pm V_{\text{rail}} = \pm 10.5\,\text{V}$. Thus, we can just choose a set of consistent initial conditions for the circuit:

At t=0:

- $V_{\text{out}} = +10.5\,\text{V}$,
- Voltage across the capacitor V_C=0, i.e. the capacitor starts uncharged.

What is V_+ when these conditions hold? What is the linear differential equation that determines the voltage across the capacitor? Note that it is linear as long as V_{out} is constant. When the output switches, what happens to the differential equation? You should obtain a linear differential equation, piecewise in time. Estimate the oscillation period by solving that equation.

[5] Note that this circuit has positive feedback and thus doesn't follow the op amp golden rules!

4. LAB EXERCISES

Op amps are prone to oscillations. Please properly decouple the power supplies of any circuit incorporating op amps with 0.1 µF capacitors between the supplies and ground. You will not be helped without proper decoupling capacitors installed!

Problem L8.1 - Current to Voltage Converter. **Build** the circuit in Fig. 8 to transform the current signal from the OP802SL phototransistor into a voltage signal. Start with $R = 100\,\mathrm{k}\Omega$. If the output is saturated ($V_{\mathrm{out}} \sim -10.5\,\mathrm{V}$), you can use a smaller resistor.

(a) What **limits** the size of the resistor that we can use in this circuit? Look at the output on your scope. If you block the room light with your hand, the voltage should change. **Explain** the sign and amplitude of the output voltage you observe when the phototransistor is exposed to greater light intensity.

(b) Place an LED about an inch from the phototransistor. Use the Wavegen to drive it with a 5 V 200 Hz square wave through a 300 Ω series resistor[6]. Set the Wavegen to Synchronized and trigger the scope on the Wavegen input and you should see a square wave signal on the scope. You may need to point the top of the LED at the phototransistor to maximize the signal. The AC signal will be on top of a large nearly constant offset from the room light. In order to better see the AC signal, it is helpful to remove this DC offset. Try covering the LED fully with your hand to see how the DC offset from ambient light changes. [7]

(c) **Couple** the output of the op amp to the scope through a 1 µF series capacitor. What is the 3 dB point of the **high-pass filter** formed by the capacitor and the scope's input impedance? Your signal should now be centered about 0 V on the scope. Make sure to adjust the scope Range to make the signal larger on the scope trace. What is the approximate **amplitude** of your signal? What is the corresponding amplitude in **current** from the phototransistor?

(d) **Adjust** both the LED and phototransistor so that they are pointing at a spot about two inches above the breadboard. **Place** a piece of white paper parallel to the breadboard at this point. You should see a square wave signal.[8] Decrease the scope Range to increase the size of the signal on the scope trace. Save your highest signal-to-noise scope trace.

(e) Optional: Adding the high-pass filter after the converter doesn't solve the fundamental problem that there is just a lot of DC parasitic light leakage coming from everywhere that can saturate your sensor. Can you design a circuit that solves this problem (i.e. that won't saturate due to DC light)?

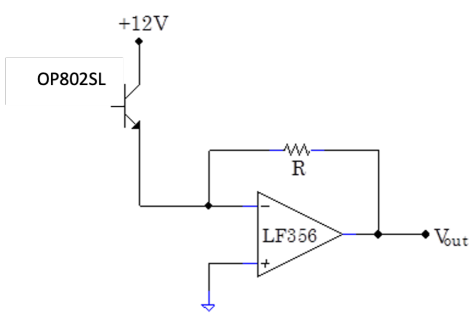

FIGURE 8. A circuit that converts light to current and then to voltage.

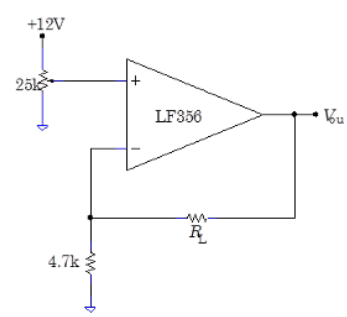

FIGURE 9. Op amp current source circuit.

[6] You will need to bend the leads of the LED and phototransistor so that the light from the LED is going into the lens on the top of the phototransistor.

[7] You've now basically made both the transmitter and the receiver of an optical communication system! Just put an optical fiber in between and you're done. In Professor Pyle's lab, we use optical decouplers like this to fully separate digital components like analog-to-digital converters (ADCs), Ethernet control, etc, from the extremely sensitive analog electronics that control our superconducting electronics.

[8] It may help to turn off the room lights, and you may need to adjust the alignment to maximize the signal.

Problem L8.2 - Op Amp Current Source. Op amps can be used to make nearly ideal voltage-controlled current sources. **Build** the circuit in Fig. 9 with $R_L = 0\,\Omega$.

(a) Set the potentiometer output to about +3 V, and **measure** the current through the load resistor (either with the DMM or through some other technique).

(b) **Swap in** different values of R_L and find the **range** over which the current doesn't vary significantly.

(c) What **limits** the range of R_L over which this circuit is a good current source with the input at +3 V?

(d) With $R_L = 4.7\,\text{k}\Omega$, **vary** the input voltage with the potentiometer. Does the current **vary** as you expect?

Problem L8.3 - Active Multistage Filters. In Lab 2, you constructed a large number of simple passive filters: single-pole[9] low-pass and high-pass RC and RL filters, and tank filters.

These simple, single-stage passive filters are often inadequate in real life. For instance, you might need a low-pass filter that rejects signals above its 3 dB frequency more strongly than you can get with a single-stage filter. To do this, you could cascade several single-pole filters in series. Likewise, you might want to design a bandpass filter which has a low-pass and high-pass filter in series, as you did in L2.3.

However, cascading two filters in series like in L2.3 is difficult since each stage "loads" the previous stage; we had to make sure that the input impedance of the following stage was much greater than the output impedance of the previous stage. With only passive elements, this is challenging. This multi-stage loading problem can be solved by adding active elements.

Most simply, one can just place op amp buffer amplifiers (i.e. an op amp follower) which has extremely high input impedance and extremely low output impedance between every stage of your amplifier as shown in Fig. 10.

(a) **Build** the circuit shown in Fig. 10[10]. It consists of an initial RC filter, a follower, and an identical RC filter. The circuit has two outputs: one, which gives the signal after only the first RC filter; and the second which includes both RC filters.

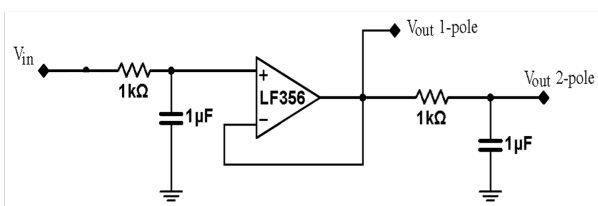

FIGURE 10. Two-stage filter with op amp follower separating the stages.

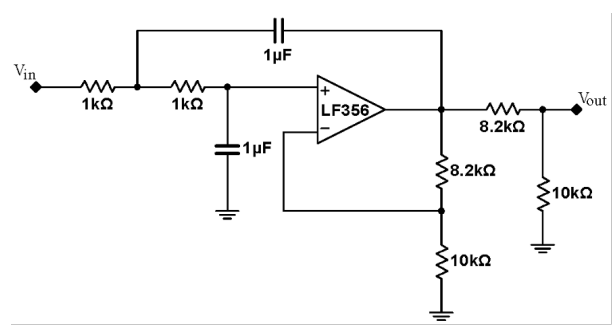

FIGURE 11. Two-pole Chebyshev Sallen-Key low-pass filter.

(b) **Perform** a Network Analysis for each of the outputs with a 1 V amplitude signal from 10 Hz to 1 kHz. Export the data from the two network analyses to a file. You should observe that above the passband, the 2-pole output is more **strongly attenuated** than the 1-pole output. Measure the 3 dB frequency for the 1-pole filter and measure the phase at this frequency. Measure the gain and phase of the 2-pole filter at the 3 dB frequency you found for the 1-pole filter and provide an explanation of these results.

(c) It is also important to consider the transient response of the filters, i.e. the response in time to an abrupt change to the input signal. Set your Wavegen to output a 12 Hz 1 V amplitude square wave. Set the Wavegen

[9] The "pole" terminology for filters comes from complex analysis. The complex transfer function of the filter response has a pole for each roll-off point. Multistage filters are more commonly called multi-pole filters, since each stage contributes one pole in the complex plane.

[10] If you have an Aukenien capacitor kit, you will not have a 1 μF capacitor. Ask a neighbor or the GSIs for one, and don't forget to give it back!

to be Synchronized and set the scope to trigger on the Wavegen input. **Send** the signal into the input the filter and **examine** the output of each of the filters. **Measure** the time required for each of the filters to settle to $1/e \approx 37\%$ of the voltage step. Using the Add Channel option, **save** your traces as Reference 1 and Reference 2.

(d) With a more sophisticated topology, it is possible to construct a filter with a sharper cutoff than the two-stage RC filter above. **Construct** the 2-pole Chebyshev Sallen-Key filter shown in Fig. 11.[11]

(e) **Perform** a Network Analysis with a 1 V amplitude wave from 10 Hz to 1 kHz. **Export** the data from your network analysis and make a plot with the gain of all three filters: the Chebyshev Sallen-Key, and the 1- and 2-pole RC filters from (a). Your plot should look like the SPICE simulation in Fig. 12.

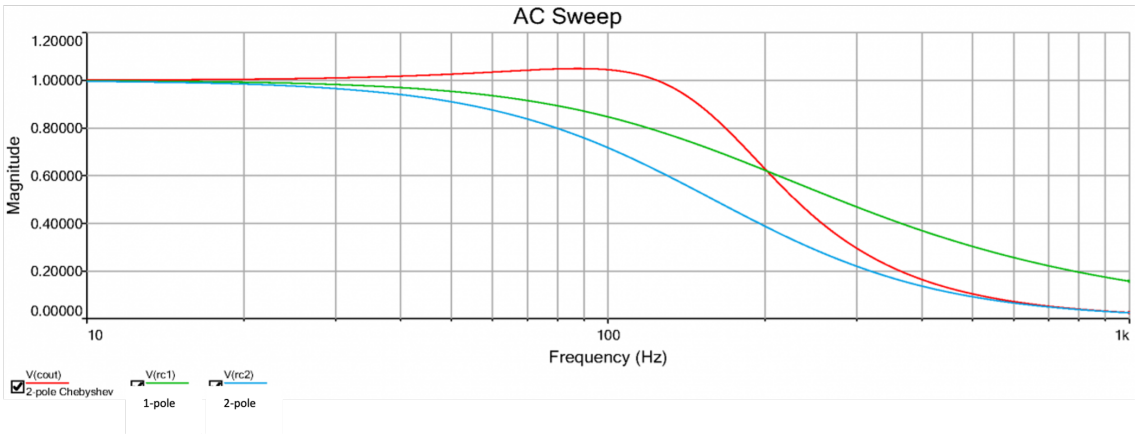

FIGURE 12. Gain for two-pole RC (cyan), two-pole Chebyshev (red), and one-pole RC (green).

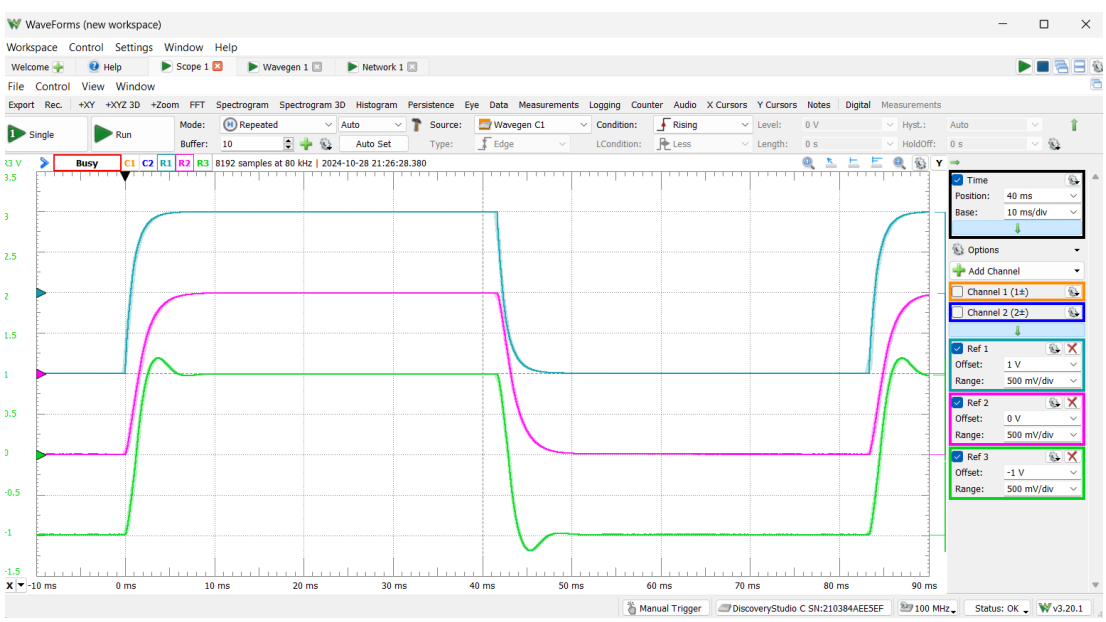

FIGURE 13. Time domain response to a square wave (yellow) for the Chebyshev (green), one-pole RC (cyan), and two-pole RC (magenta).

(f) Now redo the transient response measurement with your Sallen-Key filter. **Compare** the result with the traces of the one-pole and the two-pole filters that you measured previously. You should see traces like those in Fig. 13.

[11] "Sallen-Key" refers to the topology of the components and "Chebyshev" refers to the particular optimization used to select the values of the components; there are several common optimizations, all having somewhat different properties. You can read about these in more detail about different filter types and their design in Chapter 4 of Horowitz and Hill.

Also **measure** the settling time for this filter. Notice that while the RC filters asymptote to their final values smoothly, the Chebyshev filter overshoots. **Measure** the size of the overshoot.[12]

Problem L8.4 - Comparator. **Build** the comparator circuit in Fig. 14a, with R_1 and R_2 temporarily set to zero[13]. For simplicity the V_+ input is connected to the +5 V supply, setting the comparator threshold at +5 V. More generally, the V_+ input could be connected to any DC or AC signal.

(a) Show that the output **switches** between the two rail voltages $V_{\text{out}} = \pm 10.5\,\text{V}$ when the potentiometer voltage goes through +5 V. Look at the **output** with the scope. Can you adjust the potentiometer to obtain output voltages **intermediate** to ±10.5 V[14]? Why is this **difficult** to do? Can you set a **lower bound** on the op amp gain?

(b) Now **restrict** the output range of the potentiometer to be very near +5 V by setting $R_1 = 470\,\text{k}\Omega$ and $R_2 = 330\,\text{k}\Omega$. Make sure that you can still get the output to jump between the two limits by turning the potentiometer; adjust the resistor values if you cannot. Try to carefully **tweak** the potentiometer until you find a potentiometer setting where the output voltage fluctuates wildly between the high and low states. If don't have enough noise, you may not see these oscillations. Here, these fluctuations are caused by the noise fluctuations in the +5 V and +12 V power supplies.[15]

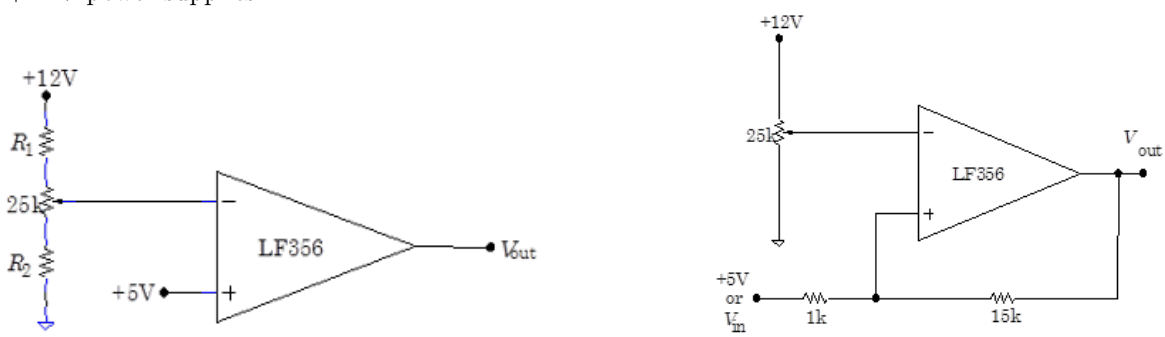

(a) Simplest comparator. (b) Hysteretic comparator.

FIGURE 14. Two kinds of comparators.

Problem L8.5 - Hysteretic Comparator. The fluctuations that you observed in the previous problem can be eliminated by using positive feedback[16] to provide hysteresis.

(a) **Build** the circuit shown in Fig. 14b using $V_{\text{in}} = +5\,\text{V}$. **Adjust** the potentiometer to cause **transitions**. **Demonstrate** that the potentiometer must be turned significantly to induce a transition in the output voltage and that there are no noise-induced transitions.

(b) **Remove** the potentiometer and **connect** the V_- input to ground. Instead of the +5 V power supply, **drive** the input with a 1 kHz 5 V amplitude triangle wave. Look at both the input and the output on the scope. You should get traces that look like those in Fig. 15. **Save** your plot.

(c) Look carefully at the input voltage at which the transitions in the output occur. You should observe that the output voltage switches to the on state at an input voltage that is **higher** than the input voltage where the output switches to the off state; this is the desired hysteretic effect. Use the scope cursors to **measure** the voltages at

[12] Sometimes, one wants to optimize a filter to faithfully reproduce an input transient. Yet another type of common filter, a Bessel filter, is optimized for this application. All these filters, like Butterworth, Chebyshev, and Bessel (there are others); as well as low-pass, high-pass, bandpass, and band-reject filters can be built using the Sallen-Key topology by adjusting the component values and swapping the placement of the resistors and capacitors as described in Horowitz & Hill, chapter 4.

[13] Note that this circuit does not use any feedback, and the golden rules do not apply.

[14] Op amps are not necessarily symmetric. With LF356, you may find that the output swings between +10.5/-11.5 V, which is fine.

[15] If you wish to measure the voltage on the pot wiper (the connection with the arrow), use your DMM, not your scope. The scope input impedance of 1 MΩ is not large enough not to load the voltage divider during measurement.

[16] Note that this circuit does not use any feedback, and the golden rules do not apply.

which the output switches from low to high and high to low. **Compare** these results with the calculation of the switching voltage thresholds in Sec. 2.2.

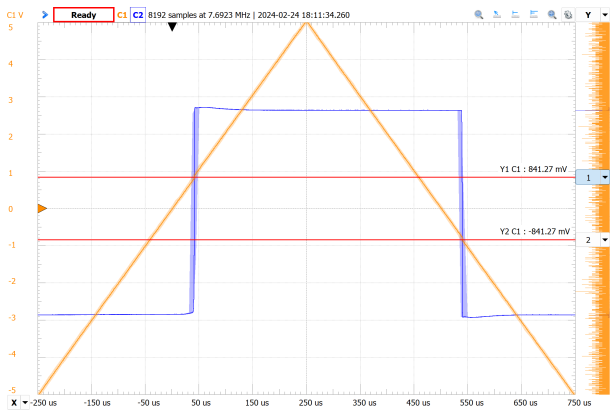

FIGURE 15. Scope trace of the hysteretic comparator output (blue) with triangle input wave (yellow). The two scopes do not have the same axes.

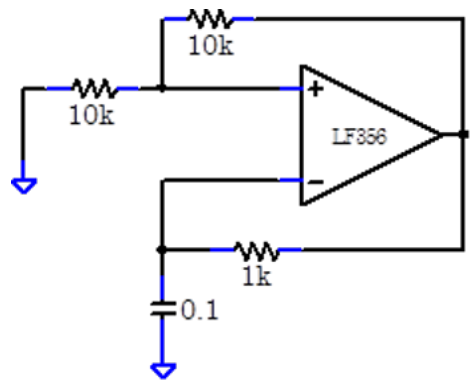

FIGURE 16. Relaxation oscillator circuit.

Problem L8.6 - Relaxation Oscillator. **Build** the relaxation oscillator shown in Fig. 16[17].

(a) Set your scopes to **measure** the op amp output and the capacitor voltage. **Save** these traces. Do your results qualitatively match the expected behavior? Explain.

(b) **Measure** the output frequency of the oscillator. Does it **match** your calculation in P8.5?

(c) *Optional*: Replace the 1 kΩ resistor with a potentiometer (using the edge+middle leads to get a variable resistor). This will allow you to change the oscillator frequency: you now have your very own oscillator (a real-life Wavegen) with a physical knob to tune the output frequency! In general, oscillators (which include clocks and lasers) are the heart of nearly all electronics today.

Problem L8.7 - Applications of Op Amps: Absolute Value Circuit. Here is a circuit to take the absolute value of a signal. It is essentially an ideal full-wave rectifier.

(a) Construct the circuit shown in Fig. 17[18].

(b) **Drive** the circuit with a variety of signals, amplitudes, and offsets from the waveform generator. Save some **illustrative** images. How **well** does the circuit work? What are the **principle differences** between this circuit and the passive diode rectifiers you have built previously? What is the **smallest signal** that you can rectify with a passive diode rectifier?

Problem L8.8 - Absolute Value Circuit Analysis. The behavior of the absolute value circuit is easiest to understand by considering negative and positive input signals separately. Recalling the second op amp golden rule, note that for both op amps, their negative inputs must be at virtual ground. This is true regardless of the sign of V_{in} and has been explicitly notated in Fig. 18a and Fig. 18b. Now let's consider the two possible signs of V_{in}.

For **negative** V_{in}, we expect that the output of the first op amp will be positive (because V_{in} is connected to the negative input) and that the current flow through the first 1 kΩ resistor is downwards, as shown with the red arrow in Fig. 18a. Thus, the greyed-out diode is reverse-biased; to a very good approximation, no current flows through it and thus for all intents and purposes, it can be removed from the circuit.

[17] Recall that, in circuit diagrams, capacitors with no units are assumed to be in microfarads.
[18] You will have to synthesize the 500 Ω resistor from two 1 kΩ resistors.

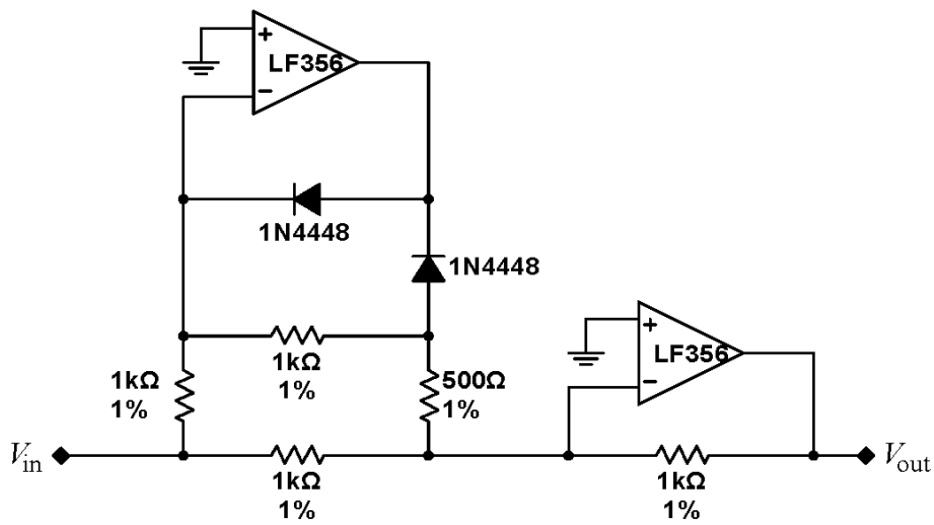

FIGURE 17. Absolute value circuit.

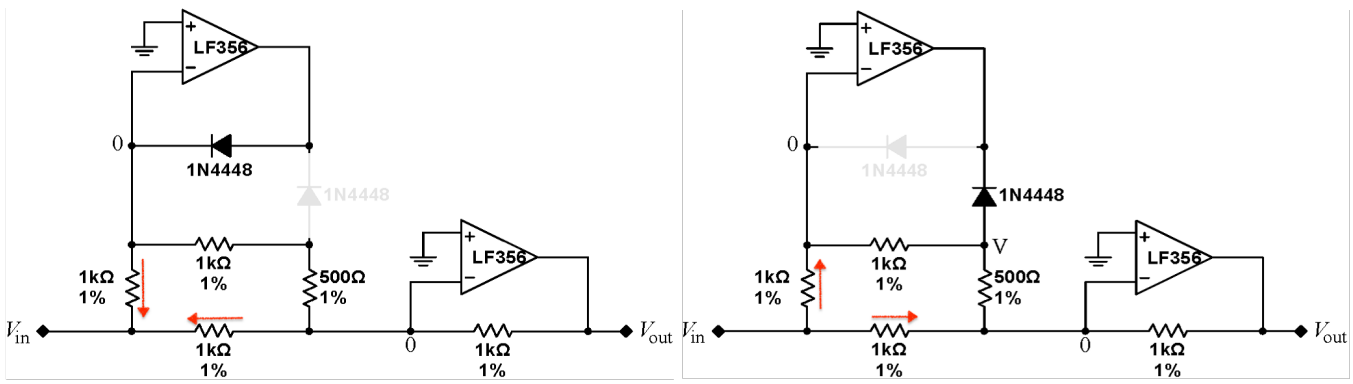

(a) $V_{\text{in}} < 0$ (b) $V_{\text{in}} > 0$.

FIGURE 18. Equivalent absolute value circuit for positive or negative V_{in}. Current flows in directions of red arrows; greyed-out diode is reverse-biased.

(a) What is the **input impedance**?

(b) What are the **currents** flowing through all the various resistors and forward-biased diodes? Most importantly, what is the **total current** entering the node marked 0 adjacent to the V_- input of the second op amp?

(c) What is the **output voltage** on the second op amp, V_{out}, that is required to generate this current?

For **positive** V_{in}, we expect that the output of the first op amp will be negative (because V_{in} is connected to the negative input) and that the current flow through the first 1 kΩ resistor is upwards, as shown with the red arrow in Fig. 18b. Thus, the greyed-out diode is reverse-biased; to a very good approximation, no current flows through it and thus for all intents and purposes it can be removed from the circuit.

(d) What are the **currents** flowing through all the various resistors and forward biased diodes?[19]

(e) What is the **voltage** at the node labeled V in Fig. 18b in terms of V_{in}?

(f) What is V_{out} in terms of V_{in}?

(g) **Combine** your results for positive and negative V_{in} to show that $V_{\text{out}} = |V_{\text{in}}|$.

[19] Hint: use Kirchoff's current law and the first op amp golden rule.